UL-EU CERTIFICATE

Certificate No.
UL-EU-01306-EN

Issue date
2024-10-15

Issue No.
2

Re-Issue date
2025-12-11

Expiry date
2034-10-14

This is to acknowledge that:
Triton Middle East LLC

Address:
PO Box 3350
New Sanaya Industrial Area
Umm AL Quwain
United Arab Emirates

Has had the product:
HEATSHIELD FS50

evaluated and meets the requirements of the standard(s):

EAD 350454-00-1104, September 2017

Places of production:
T/002

Authorised Signatory:

Chris Johnson
Issued by UL International (UK) Ltd

UKAS PRODUCT CERTIFICATION
4705

This is to certify that representative samples of the Certified Product listed above have been investigated by Underwriters Laboratories to the Standard(s) indicated on this Certificate, in accordance with the UL Global Services Agreement and the UL-EU Mark Service Terms and Conditions ("Agreement"). The Certificate Holder is entitled to use the UL-EU Mark for the Certified Product listed on the certificate and manufactured at the production site(s) listed, in accordance with the terms of the Agreement. Only those products bearing the UL-EU Mark for Europe should be considered as being covered by UL's UL-EU Mark Service. This Certificate shall remain valid through the Expiration date, unless a Standard identified on this Certificate is amended or withdrawn prior to that date or there is a non-compliance with the Agreement.

UL Solutions
Form-ULID-006104 V10.0

UL International (UK) Limited
Unit 1-4 Horizon, Kingsland Business Park, Wade Rd.,
Basingstoke. RG24 8AH United Kingdom

© 2025 UL LLC. All rights reserved.

Appendix UL-EU CERTIFICATE UL-EU-01306-EN

This certificate relates to the use of HEATSHIELD FS50, a flexible intumescent wrap strip used to form penetration seals where combustible pipes and combustible conduits penetrate walls and floors. The detailed scope is given in pages 4 to 8 of this Certificate. This shows the thickness and acceptable dimensions, substrates and orientations required to provide fire resistance periods of up to 120 minutes (EI 120).

The product is certificated on the basis of:

i) Inspection and surveillance of factory production control by UL
ii) Fire resistance test data in accordance with EN 1366-3:2021
iii) Classification in accordance with EN 13501-2:2016
iv) Durability and Serviceability as defined in EAD 350454-00-1104, September 2017

According to EN 1366-3: 2021+A1: 2024, Clause H.4.1.8.6.2, the following end uses are envisaged* based upon the tested pipe end configuration:

Pipe material	Tested pipe end	Envisaged use scenario
Metal	C/U or C/C	Closed pipe systems (e.g. systems under pressure)
	U/U, U/C or C/U	Ventilated pipe systems (e.g. sewage pipes) and for closed pipe systems
Plastic	U/U or C/U	Ventilated pipe systems and for closed pipe systems
	U/U	Ventilated pipe systems, for rainwater systems and for closed pipe systems

* In the case where a national prescription is in conflict with the content of the table above, the national prescriptions prevail.

UL International (UK) Limited
Unit 1-4 Horizon, Kingsland Business Park, Wade Rd.,
Basingstoke. RG24 8AH United Kingdom

© 2025 UL LLC. All rights reserved.

Appendix UL-EU CERTIFICATE UL-EU-01306-EN

Performance of the product and references to the methods used for its assessment

Product-type: Wrapstrip/Pipe closure	Intended use: Penetration Seal	
Basic requirement for construction work	Basic Requirement	Performance
BWR 2 Safety in case of fire		
EN 13501-1	Reaction to fire	Class E
EN 13501-2	Resistance to fire	Annex A
BWR 3 Hygiene, health and the environment		
EN 1026	Air permeability	No performance determined
EAD 350454-00-1104, Annex C	Water permeability	No performance determined
Declaration of manufacturer & EN 16516	Content, emission and/or release of dangerous substances	Use categories: IA1, S/W2 Declaration of manufacturer
BWR 4 Safety and accessibility in use		
EOTA TR 001:2003	Mechanical resistance and stability	No performance determined
EOTA TR 001:2003	Resistance to impact/movement	No performance determined
EOTA TR 001:2003	Adhesion	No performance determined
EAD 350454-00-1104, Clause 2.2.9	Durability	Z_1
BWR 5 Protection against noise		
EN 10140-1,2,4,5/ EN ISO 717-1	Airborne sound insulation*	No performance determined
BWR 6 Energy economy and heat retention		
EN 12664, EN 12667, EN 12939, EN ISO 8990, EN ISO 6946, EN ISO 14683, EN ISO 10211, EN ISO 10456	Thermal properties	No performance determined
EN ISO 12572, EN 12086, EN ISO 10456	Water vapour permeability	No performance determined

UL International (UK) Limited
Unit 1-4 Horizon, Kingsland Business Park, Wade Rd.,
Basingstoke. RG24 8AH United Kingdom

© 2025 UL LLC. All rights reserved.

ANNEX A – Resistance to Fire Classification – HEATSHIELD FS50

A.1 Flexible or rigid wall constructions with wall thickness of minimum 135 mm

A.1.1 Penetration seals for plastic conduits, in drywalls and concrete/masonry walls

Penetration Seal: Combustible conduits centered within the aperture and sealed with HEATSHIELD FS50. Bead of HEATSHIELD S500 sealant (10 mm x 10 mm) to be applied around penetrant on both sides of wall. Minimum separation between penetration seals of 100 mm.

Construction details:

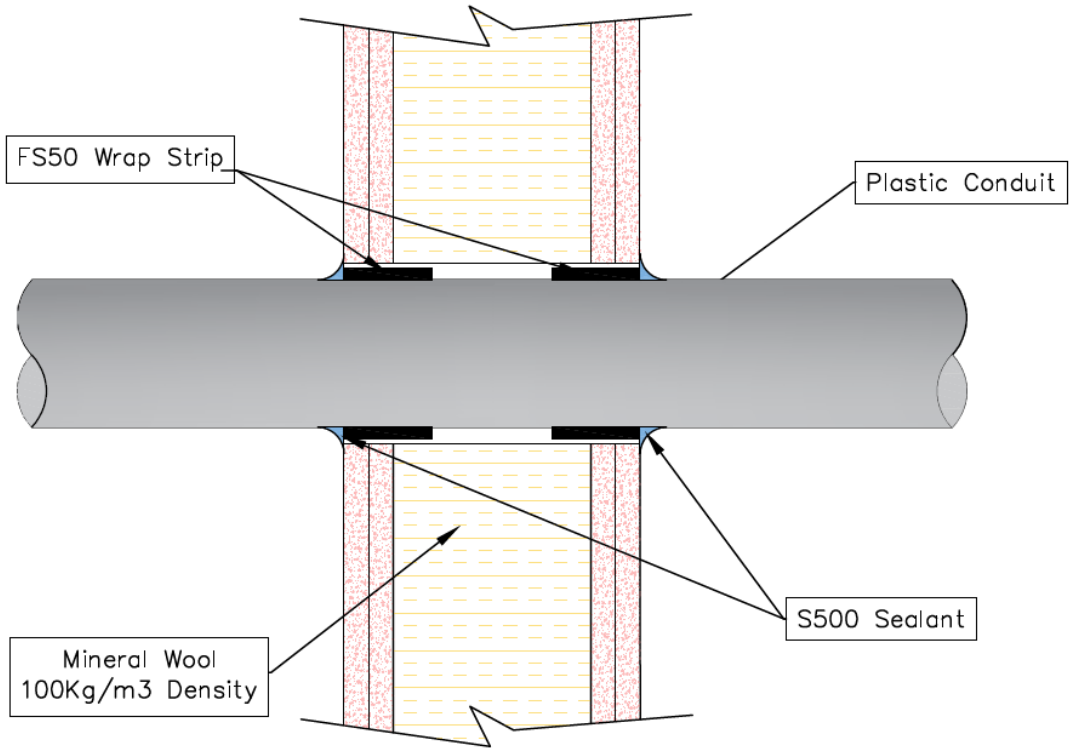

Services	Opening size [mm]	HEATSHIELD FS50 Configuration	Annular space	Classification
PVC conduit, Diameter ≤ 32 mm, wall thickness 2.5 mm	Ø ≤ 44	1 layer	Maximum 4 mm between FS50 wrap strip and supporting construction.	**E 120 C/C** **EI 120 C/C**

UL International (UK) Limited
Unit 1-4 Horizon, Kingsland Business Park, Wade Rd.,
Basingstoke. RG24 8AH United Kingdom

© 2025 UL LLC. All rights reserved.

A.2 Rigid walls constructions with wall thickness of minimum 125 mm

A.2.1 Penetration seals for plastic pipes, in concrete/masonry walls

Penetration Seal: Combustible pipes centered within the aperture and sealed with HEATSHIELD FS50. Minimum separation between penetration seals of 100 mm.

Construction details:

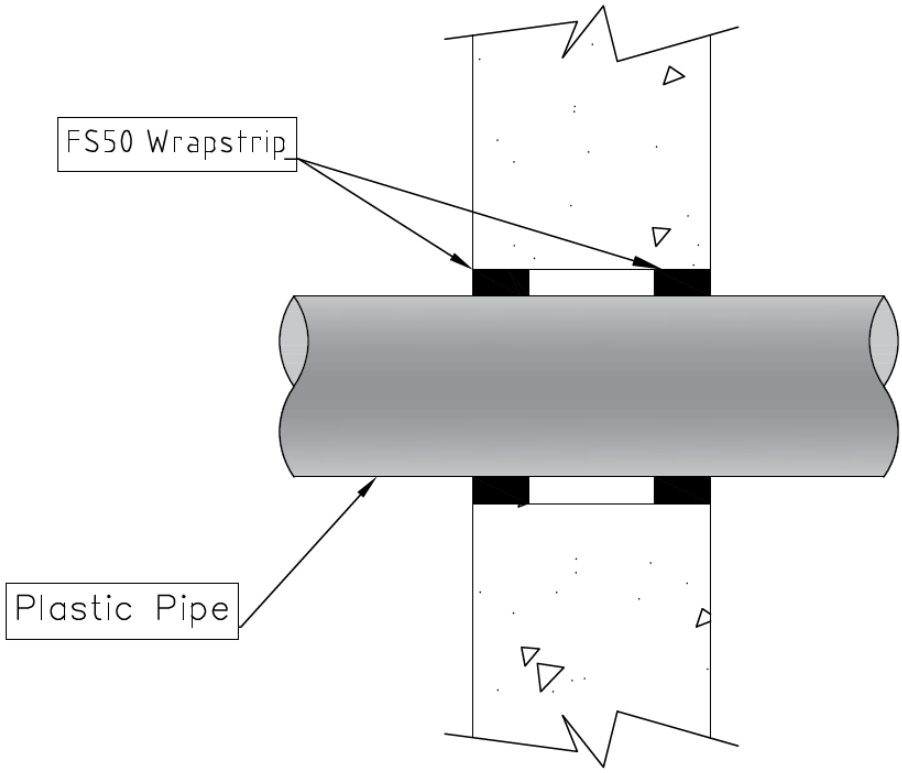

Services	Opening size [mm]	HEATSHIELD FS50 Configuration	Annular space	Classification
PVC pipe, Diameter ≤ 110 mm, wall thickness 4.2 mm	Ø ≤ 132	Min. 4 layers	Max. 3 mm between FS50 wrap strip and supporting construction.	**E 120-C/C** **EI 120-C/C**
PVC pipe, Diameter ≤ 160 mm, wall thickness 6.2 mm	Ø ≤ 180	Min. 5 layers	N/A	**E 120-C/C** **EI 120-C/C**

UL International (UK) Limited
Unit 1-4 Horizon, Kingsland Business Park, Wade Rd.,
Basingstoke. RG24 8AH United Kingdom

© 2025 UL LLC. All rights reserved.

A.2.2 Penetration seals for plastic pipes, in concrete/masonry walls

Penetration Seal: Combustible pipes centered within the aperture and sealed with HEATSHIELD FS50. Bead of HEATSHIELD S500 sealant (10 mm x 10 mm) to be applied around penetrant on both sides of wall. Minimum separation between penetration seals of 100 mm.

Construction details:

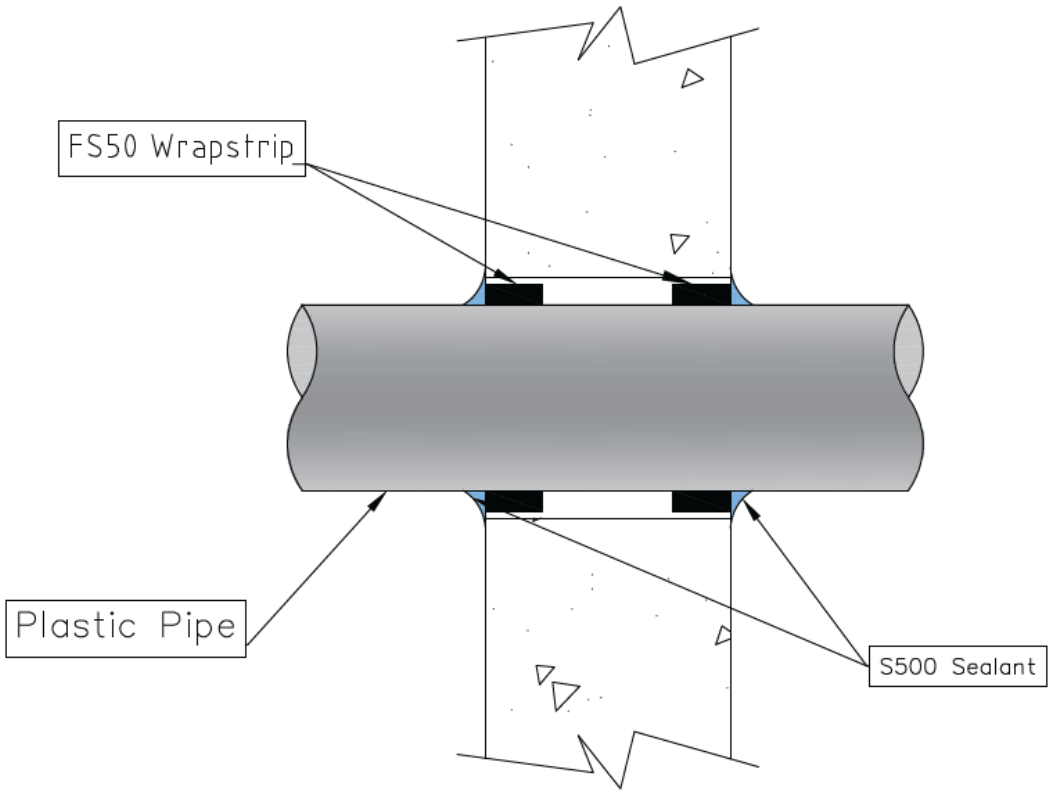

Services	Opening size [mm]	HEATSHIELD FS50 Configuration	Annular space	Classification
PVC pipe, Diameter ≤ 50 mm, wall thickness 2.4 mm	Ø ≤ 63	Min. 2 layers	Max. 3 mm between FS50 wrap strip and supporting construction.	**E 120 C/C** **EI 120 C/C**
ABS pipe, Diameter ≤ 36 mm, wall thickness 2.2 mm	Ø ≤ 50	Min. 2 layers		**E 120 C/C** **EI 120 C/C**

UL International (UK) Limited
Unit 1-4 Horizon, Kingsland Business Park, Wade Rd.,
Basingstoke. RG24 8AH United Kingdom

© 2025 UL LLC. All rights reserved.

A.3 Rigid floor constructions with floor thickness of minimum 150 mm

A.3.1 Penetration seals for plastic pipes, in concrete floors with HEATSHIELD S500 sealant

Penetration Seal: Combustible pipes centered within the aperture and sealed with HEATSHIELD FS50 flush to bottom side of the floor. Bead of HEATSHIELD S500 sealant (10 mm x 10 mm) to be applied around penetrant on top side of floor. Minimum separation between penetration seals of 100 mm.

Construction details:

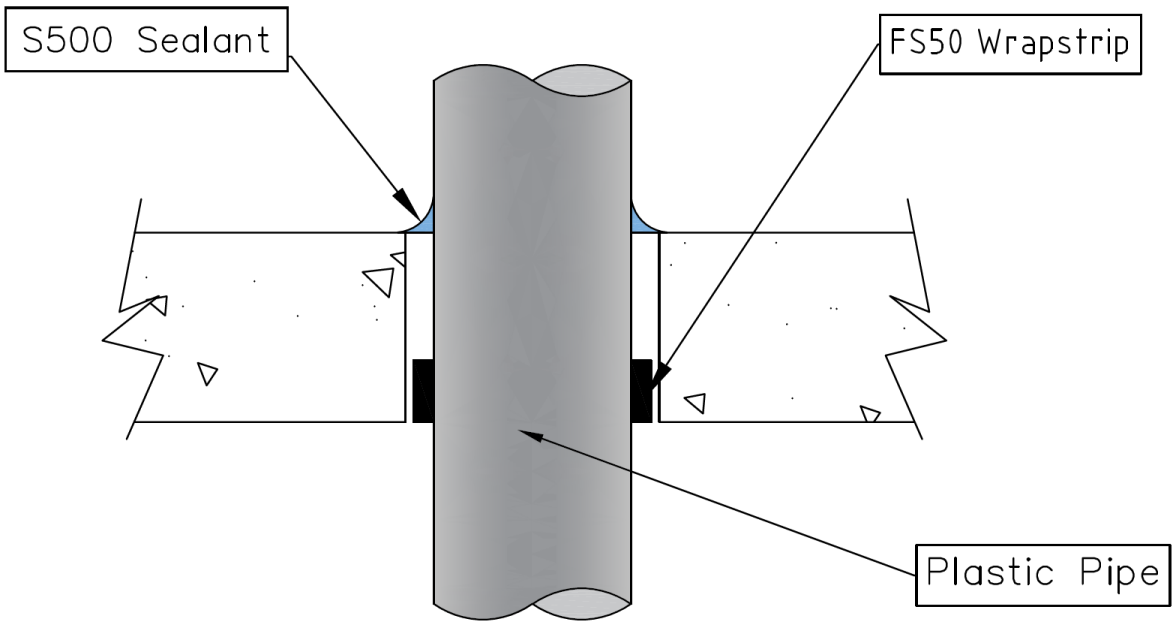

Services	Opening size [mm]	HEATSHIELD FS50 Configuration	Annular space	Classification
PVC pipe, Diameter ≤ 50 mm, wall thickness 2.4 mm	Ø ≤ 63	Min. 2 layers	Max. 3 mm between FS50 wrap strip and supporting construction.	**E 120 C/C** **EI 120 C/C**
PVC pipe, Diameter ≤ 110 mm, wall thickness 4.2 mm PVC pipe	Ø ≤ 132	Min. 4 layers		**E 120 C/C** **EI 120 C/C**
PVC conduit, Diameter ≤ 32 mm, wall thickness 2.5 mm	Ø ≤ 44	Min. 2 layers		**E 120 C/C** **EI 120 C/C**

UL International (UK) Limited
Unit 1-4 Horizon, Kingsland Business Park, Wade Rd.,
Basingstoke. RG24 8AH United Kingdom

© 2025 UL LLC. All rights reserved.

A.3.2 Penetration seals with mortar backfill

Penetration Seal: Combustible pipes centered within the opening and sealed with HEATSHIELD FS50 to bottom side of the floor. Gap around penetrant and FS50 wrap strip sealed with mortar to full depth of floor. Minimum separation between penetration seals of 100 mm.

Construction details:

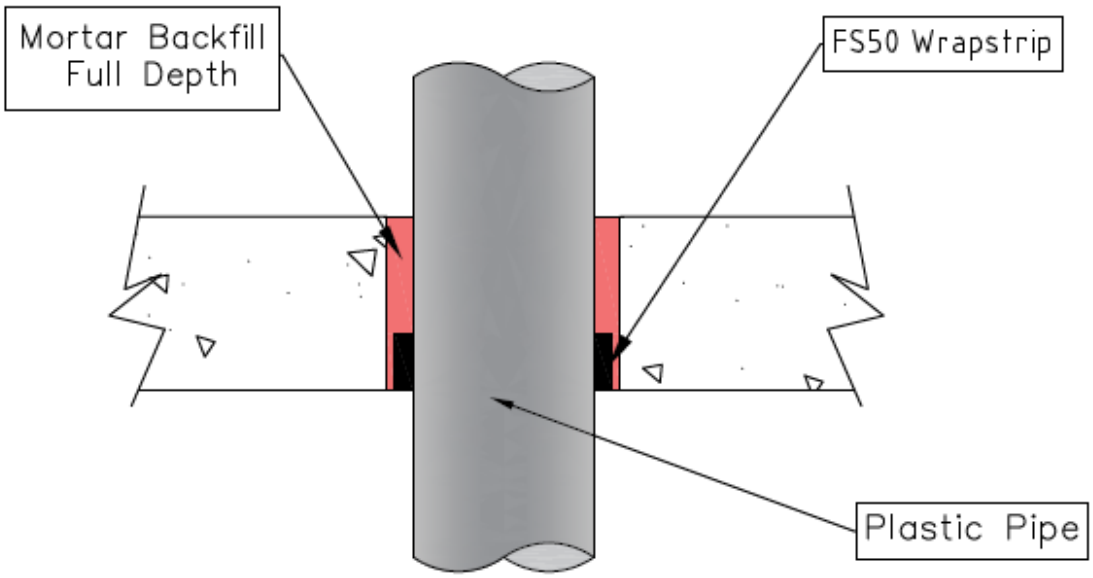

Services	Opening size [mm]	HEATSHIELD FS50 Configuration	Annular space	Classification
PVC pipe, Diameter ≤ 160 mm, wall thickness 6.2 mm	Ø ≤ 202	Min. 5 layers	Max. 21 mm between pipe and aperture	**E 90-C/C** **EI 90-C/C**

UL International (UK) Limited
Unit 1-4 Horizon, Kingsland Business Park, Wade Rd.,
Basingstoke. RG24 8AH United Kingdom

© 2025 UL LLC. All rights reserved.

Appendix UL-EU CERTIFICATE UL-EU-01306-EN

The UL-EU Marks, displayed below represent the enhanced and alternate version of the product marking. Either Mark can be used. These Marks shall appear on certified products only. Minimum size is not specified, as long as the Mark is legible. The following is suggested.

*Note: E12345 is an example of the UL file number.

The minimum height of the registered trademark symbol ® shall be 1 mm. When the overall diameter of the UL-EU Mark is less than 9.5 mm, the trademark symbol may be omitted if it is not legible to the naked eye.

The UL-EU Mark may appear on a label, nameplate, or may be cast, stamped or molded into the product. When appearing on a label or nameplate, the Manufacturer's name or trademark along with a model number and UL File number are also required on that same label or nameplate. If cast, stamped or molded, the Manufacturer's name or trademark and model number shall also appear elsewhere on the product.

All content shall be in accordance with the details provided on this UL-EU Certificate.

PROCUREMENT

The Production site may reproduce the Mark or obtain it from a UL authorized supplier. The list of UL authorized suppliers can be found on UL's online directory at www.ul.com.

UL International (UK) Limited
Unit 1-4 Horizon, Kingsland Business Park, Wade Rd.,
Basingstoke. RG24 8AH United Kingdom

© 2025 UL LLC. All rights reserved.